环保物料

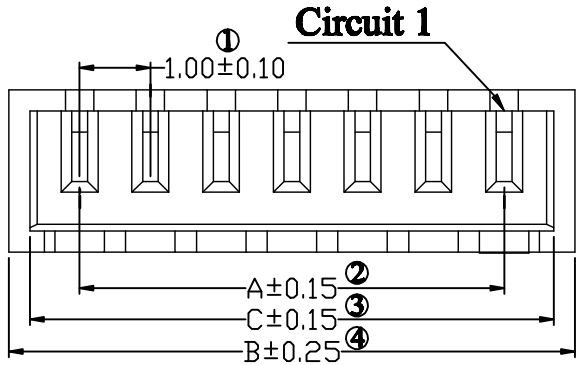

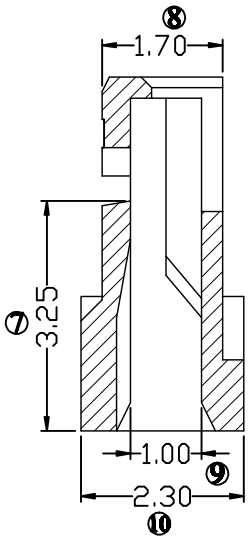

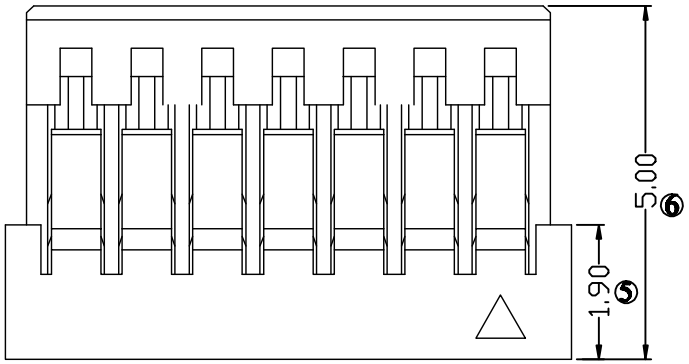

■ **Specifications(规格)：**

- Voltage rating(额定电压) : 50V AC / DC
- Current rating(额定电流) : 1A AC / DC
- Withstanding voltage(耐压值) : 500V AC/minute
- Temperature range(工作温度) : -25℃~+85℃
- Insulation resistance(绝缘电阻) :≥100MΩ
- Contact resistance(接触电阻) : ≤20mΩ
- After environmental testing(环境测试后)： ≤30mΩ

■ **Housing(胶壳)**

- Part No.（料号）:N1000HA-XXP
- Poles (PIN数) : 02-20
- Material（材质）: PBT UL 94V-0
- Suitable HHB N1000T Series Terminal(匹配N1000T系列端子)
- Q'ty（数量）: 1,000Pcs/Bag/每袋（1, 000Pcs）

Poles	Part No.	Dimensions (mm)			Poles	Part No.	Dimensions (mm)		
		A	B	C			A	B	C
2	N1000HA-02P	1.00	3.00	2.40	12	N1000HA-12P	11.00	13.00	12.40
3	N1000HA-03P	2.00	4.00	3.40	13	N1000HA-13P	12.00	14.00	13.40
4	N1000HA-04P	3.00	5.00	4.40	14	N1000HA-14P	13.00	15.00	14.40
5	N1000HA-05P	4.00	6.00	5.40	15	N1000HA-15P	14.00	16.00	15.40
6	N1000HA-06P	5.00	7.00	6.40	16	N1000HA-16P	15.00	17.00	16.40
7	N1000HA-07P	6.00	8.00	7.40	17	N1000HA-17P	16.00	18.00	17.40
8	N1000HA-08P	7.00	9.00	8.40	18	N1000HA-18P	17.00	19.00	18.40
9	N1000HA-09P	8.00	10.00	9.40	19	N1000HA-19P	18.00	20.00	19.40
10	N1000HA-10P	9.00	11.00	10.40	20	N1000HA-20P	19.00	21.00	20.40
11	N1000HA-11P	10.00	12.00	11.40					

日期 DATE	旧版次 OLD REV	新版次 NEW REV	变更内容 DESCRIPTION	审核 CHK	核准 APPD
2011/05/14	A	B	修改图框格式		

一般公差 GENERAL TOLERANCE
.X ±0.3
.XX ±0.2
.XXX ±0.1
角法 PROJECT

东莞市翰皓精密电子有限公司
Dongguan HanHao Precision Electronics Co.,Ltd

核准 APPD	审核 CHK	绘图 DR	日期 DATA
	SUCCESS	刘艳	2007/05/03

料号 PART NO N1000HA-XXP
品名 TITLE 1.00 mm Crimp Style connectors

单位 UNIT	比例 SCALE	图号 NUMBER	版次 REV
MM	1/1	A-106	B